REV	DESCRIPTION	DATE	BY
–	INITIAL DRAWING RELEASE	3/23/11	JPH

TUBING COLOR CODE

BLACK (BK) – AIR TO INJECTOR
ORANGE (OG) – AIR SUPPLY TO CONTROLS
CLEAR (CL) – OIL TO MOTOR OUTSIDE CONTROL PANEL
GREY (GY) – CYLINDER TO HOME POSITION
BLUE (BU) – CYLINDER TO WORK POSITION
WHITE (WH) – TO POWER VALVE PILOTS FROM CONTROLS

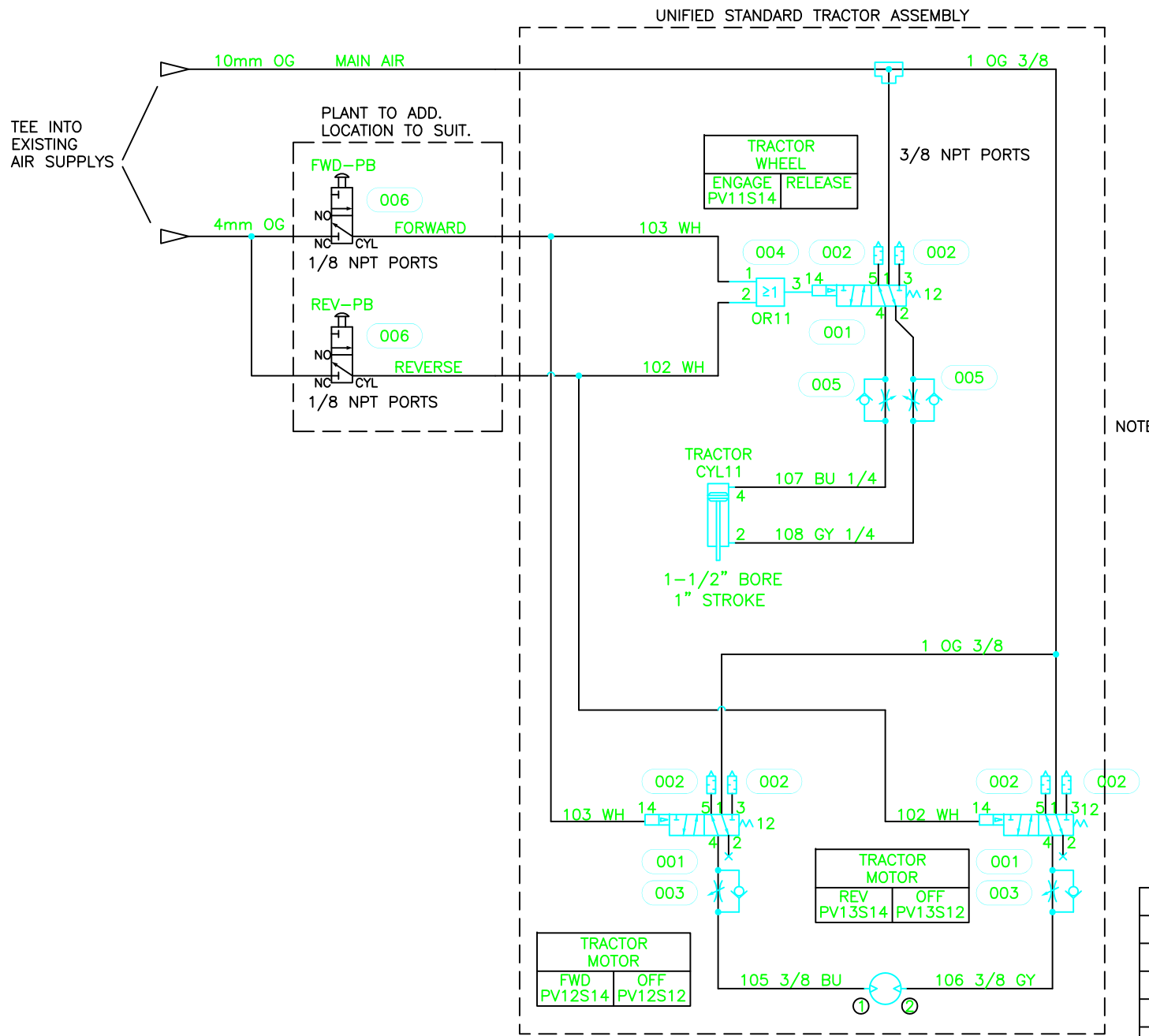

NOTE: TRACTOR FITTINGS AND VALVES ARE NPT STANDARD. USE PROPER FITTINGS THAT WILL ADAPT NPT TO METRIC WHERE REQUIRED.

ITEMS 1–5 EXIST AS PART OF STANDARD TRACTOR

STK	QTY	PART NUMBER	MANUFACTURER	DESCRIPTION
006	2	31P	HUMPHREY	3 WAY VALVE
005	2	119309–125	ARO	1/8" FC MALE x 1/4" PTC
004	1	81–540–001	CROUZET	LOGIC ELEMENT, INLINE "OR"
003	2	NAS3200–N03	SMC	3/8npt FLOW CONTROL
002	6	B3MN	NUMATICS	3/8 NPT BREATHER VENT
001	3	NVFA5120–03N	SMC	3/8 NPT SPRING RETURN VALVE

ITEM	Q'TY	DESCRIPTION	PART NO.

PARTS LIST

PROPRIETARY NOTICE
This document contains proprietary information which may not be reproduced, copied or disclosed to others for any purpose without written permission from Unified Industries, Inc.

UNLESS OTHERWISE NOTED:
.X = ±.030 .XX = ±.010 .XXX = ±.005
FRACTIONS = ±1/16"
ANGLES = ±1°/30'
*BREAK ALL SHARP EDGES WITH .03R MAXIMUM.
DO NOT SCALE DRAWINGS

APPROVALS	DATE
DRAWN JPK	3/23/2011
CHECKED	
ENGR	
PLOT DATE	3/24/2011
SHOP ORDER#	–

UNIFIED INDUSTRIES, INC.
Howell, Michigan

TITLE
UNIFIED TRACTOR SCHEMATIC

SIZE D | DWG NO. UNIFIED TRACTOR SCHEMATIC.DWG | REV. –
SCALE 1"=1" | PART. NO. | REF. TRACTOR | SHEET 1 OF 1